2006 Sta.5 window plate

view from interior

- 4 standard flange ports
- 5 face-seal ports

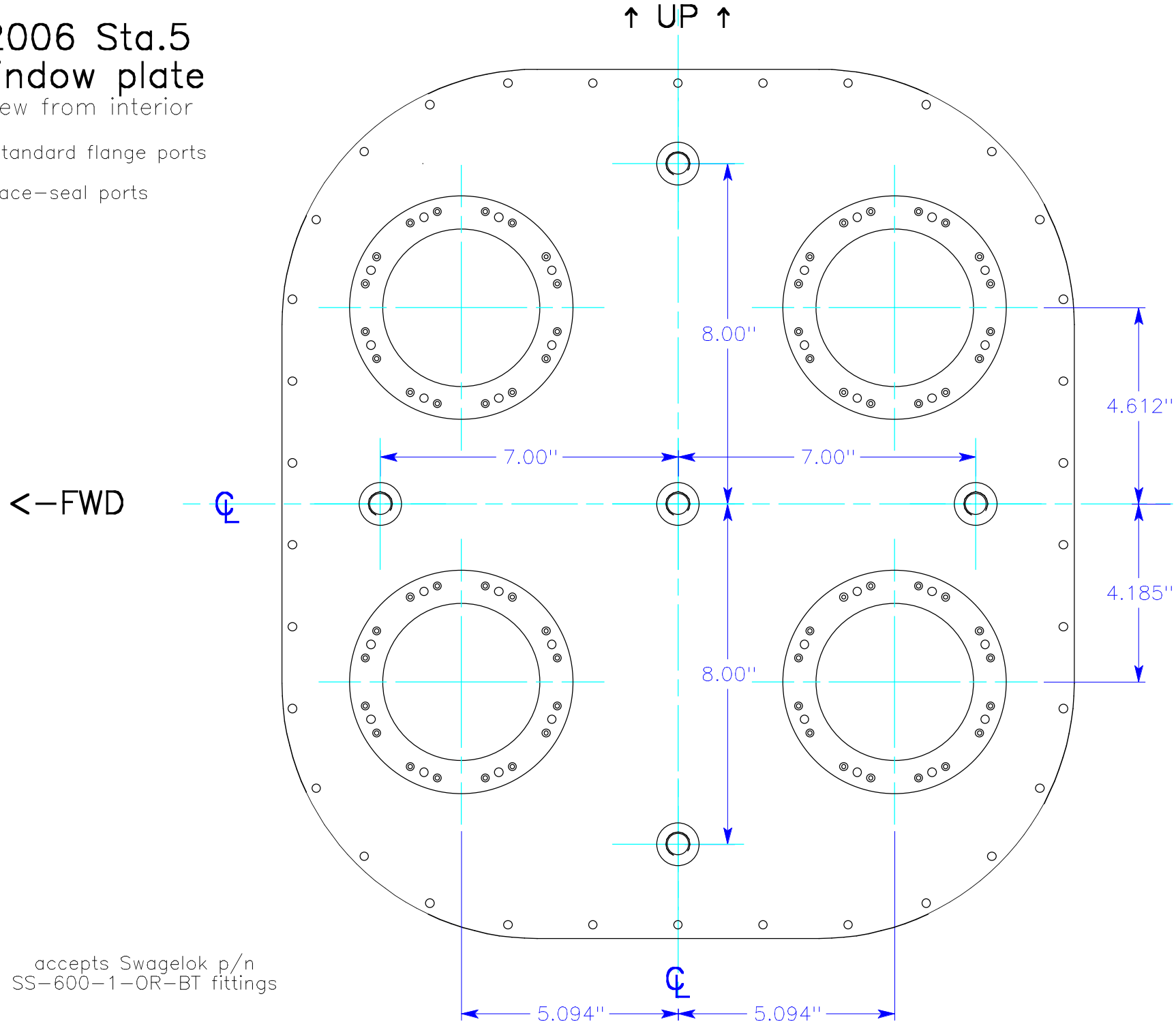

accepts Swagelok p/n
SS-600-1-OR-BT fittings