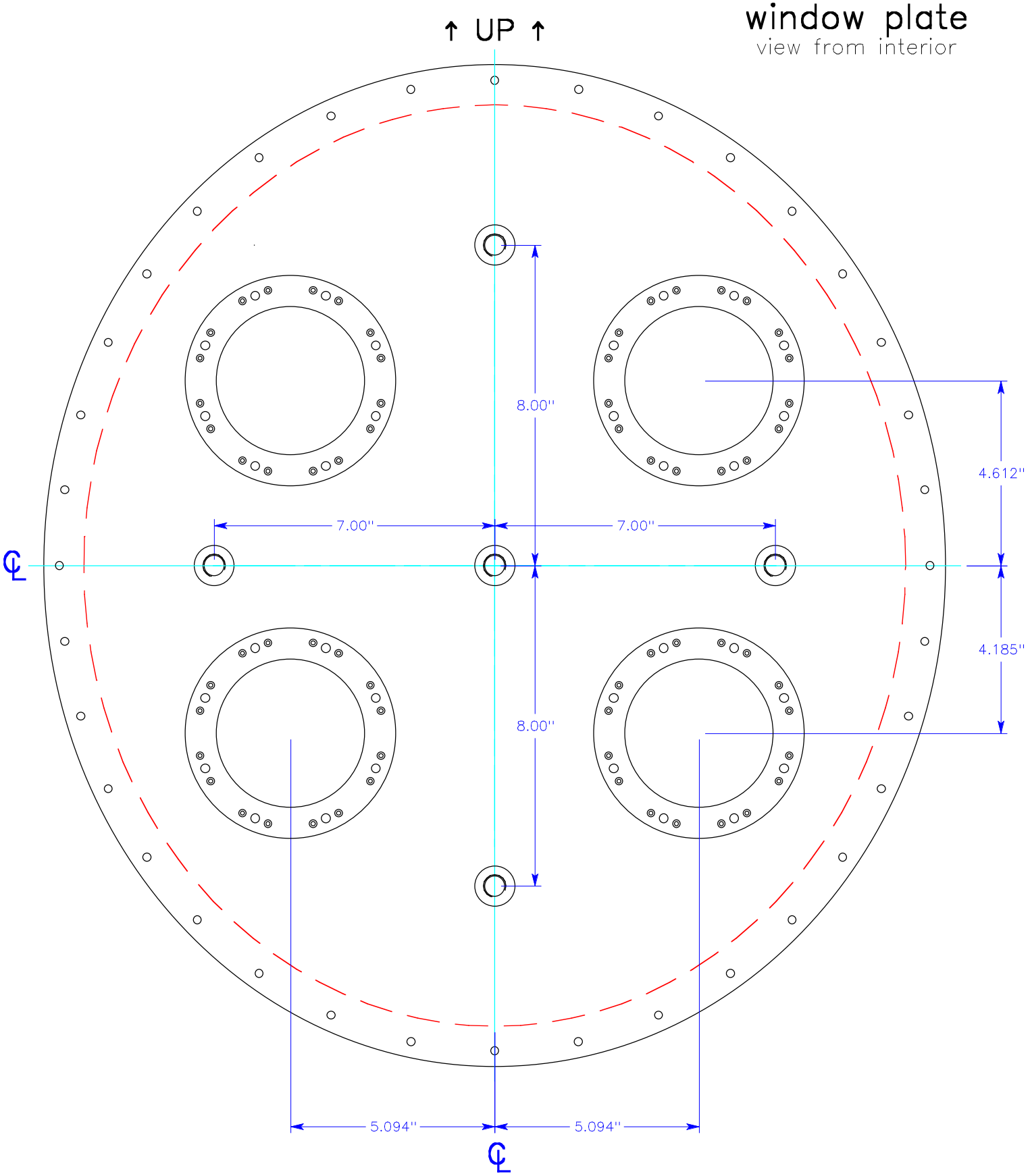2006 Sta. 7
window plate
view from interior