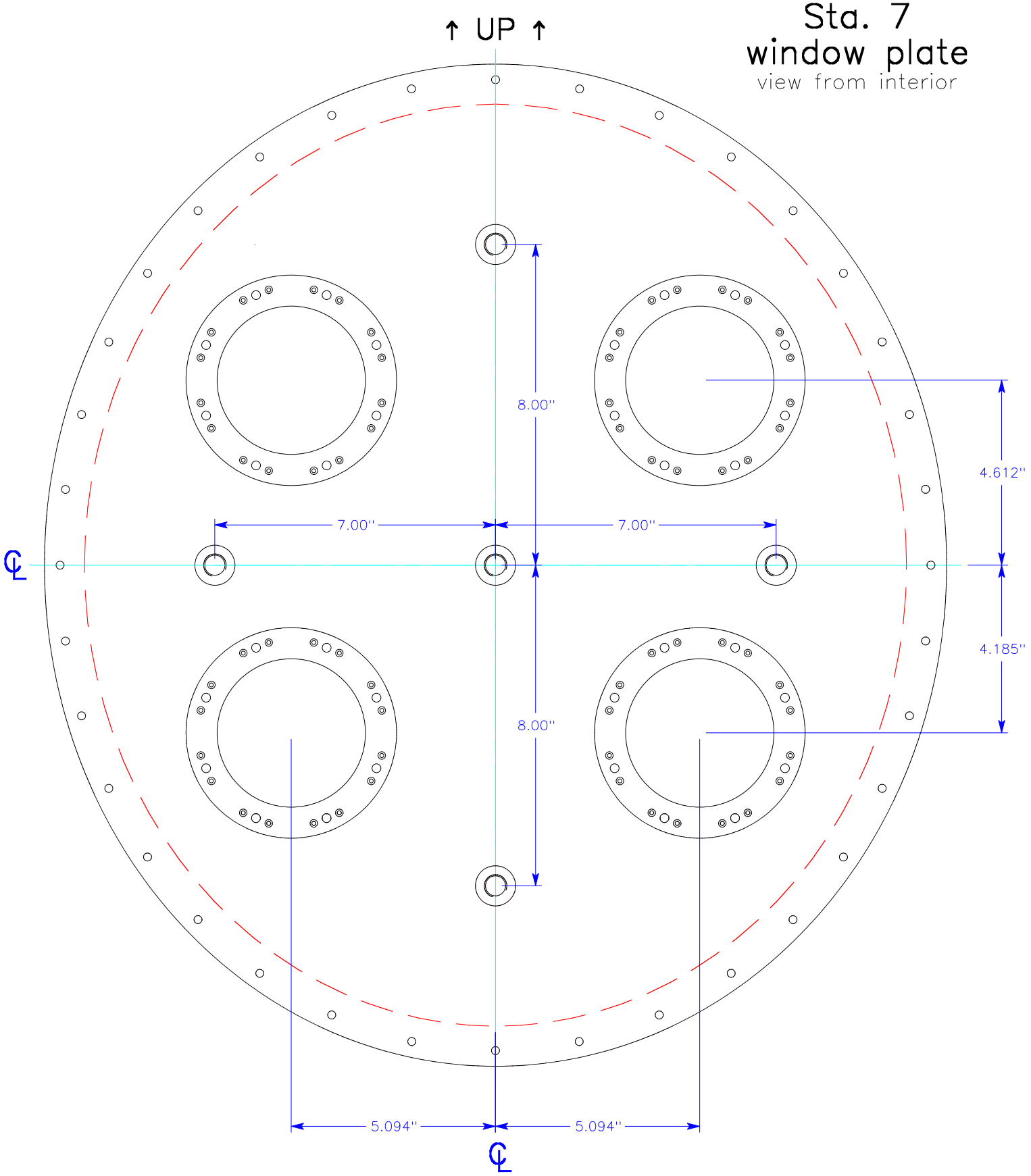SONGNEX
Sta. 7
window plate
view from interior