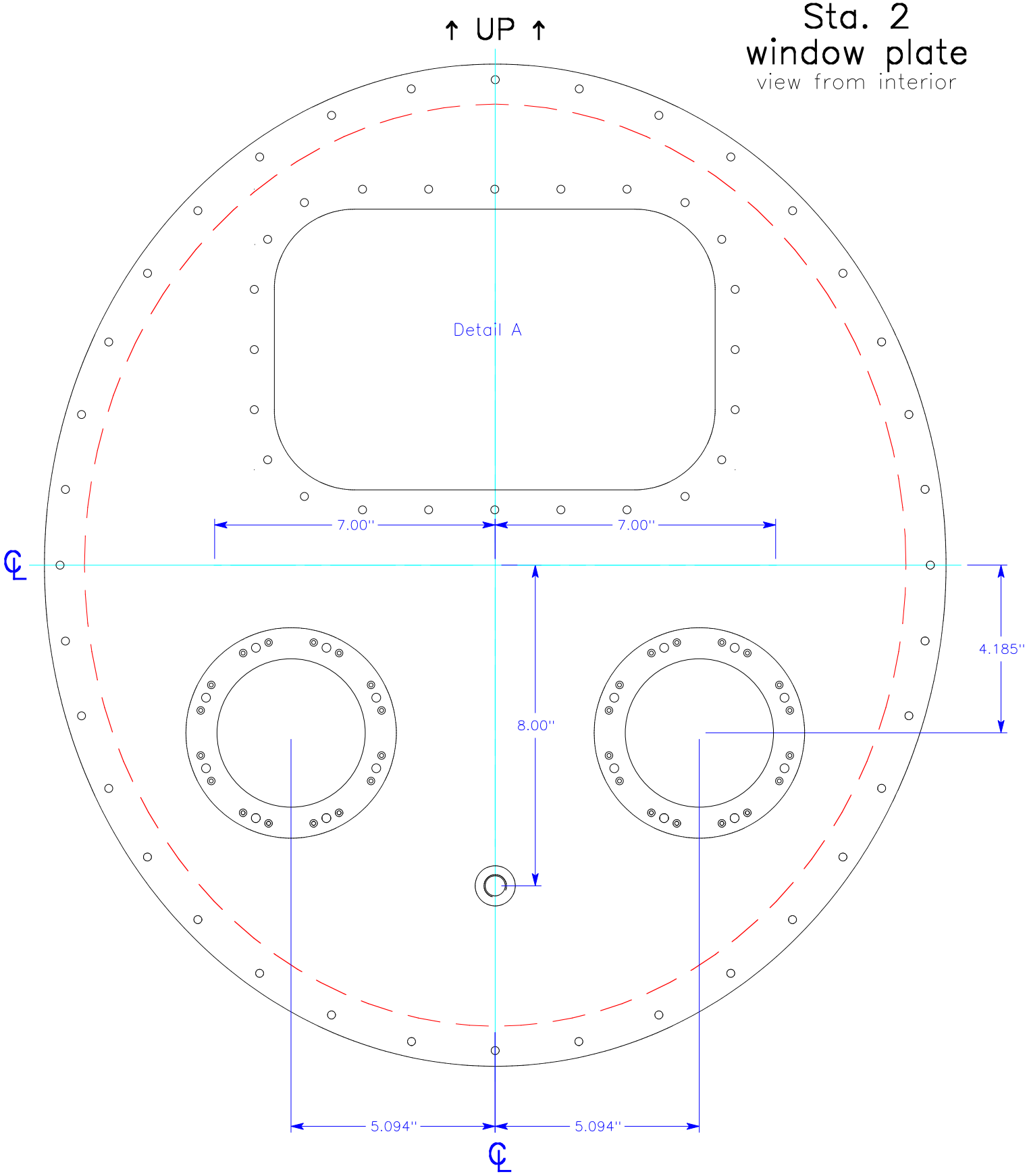SONGNEX
Sta. 2
window plate
view from interior