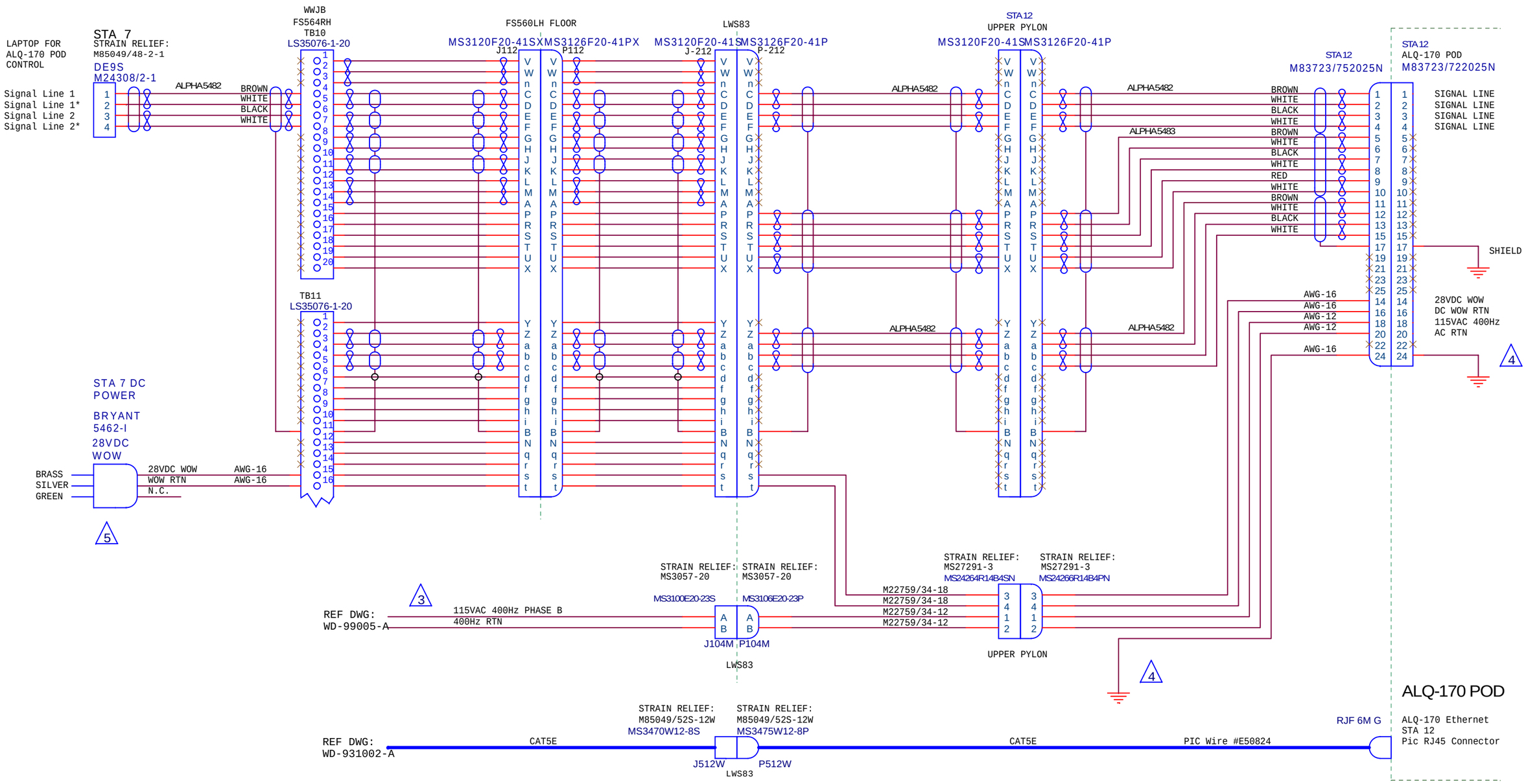

NOTES:

1. ALL SINGLE CONDUCTOR WIRE M22759/34-20 UNLESS NOTED.
2. WIRING FROM WWJB TO LWS83 AS PER DRAWING WD-990001-A.
3. POWER: 115 VAC-400 Hz-PHASE B. CHANGE CBJ2L FROM 30A TO 15A. REF DWG:990005-A.
4. GROUND CONNECTION TERMINATED TO LOCAL GROUND STUDS AT PYLON WING STA 12 AND INSIDE INSTRUMENT POD.
5. CIRCUIT BREAKER: 5A CBE29C REF DWG:000019-A SHEET 14.

SIGNAL DIST. & COLLECTION INTERFACE LEFT WING WIRING - TEXAQS 2006 PROJECT WIRING TO ALQ-170 POD			
DATE: Monday, July 17, 2006	REV DATE: Thursday, August 03, 2006		SHEET 1 OF 1
NOAA / AOC / SED PO Box 6829 MacDill AFB, FL 33608	REV: –	FILE: 990032_1 ENG: JED APP:	DRAWING NUMBER WD-990032-I