Right Floor Plate Shown
Left Floor Plate is Mirror Image of Right Floor Plate
Each Set Consists of One Right and One Left

7075-T6 Aluminum
Break all edges
Alodine (Iridite) Finish

Relative Hole Spacing +/- 0.005"
Thickness + 0.020" - 0.005"
All Other Dimensions +/- 0.020"

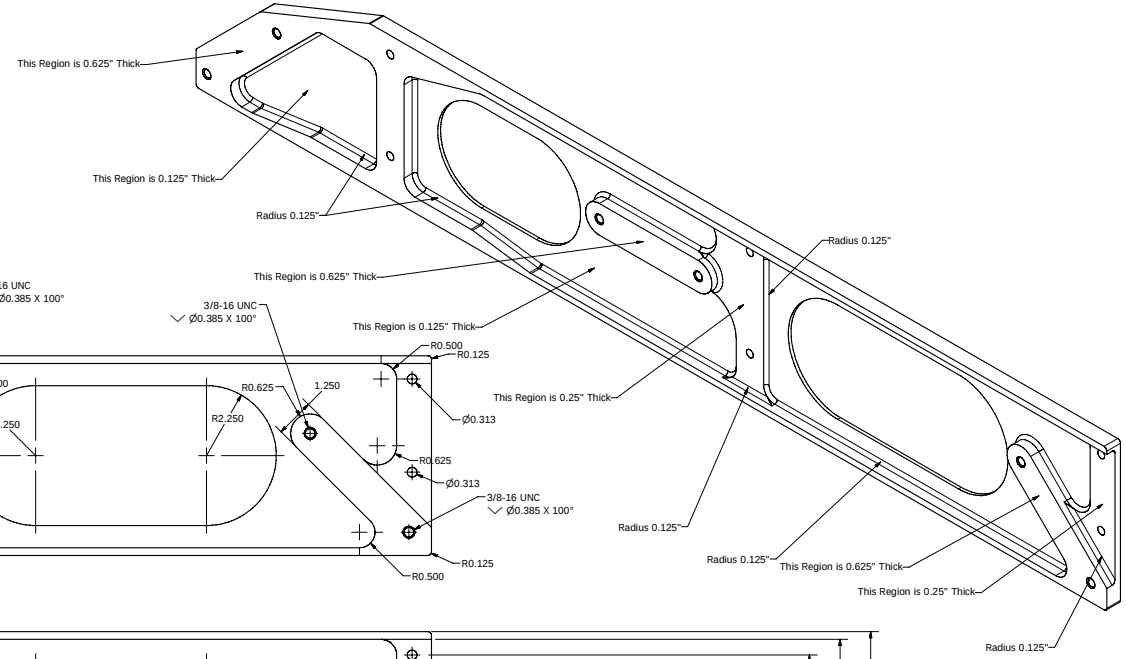

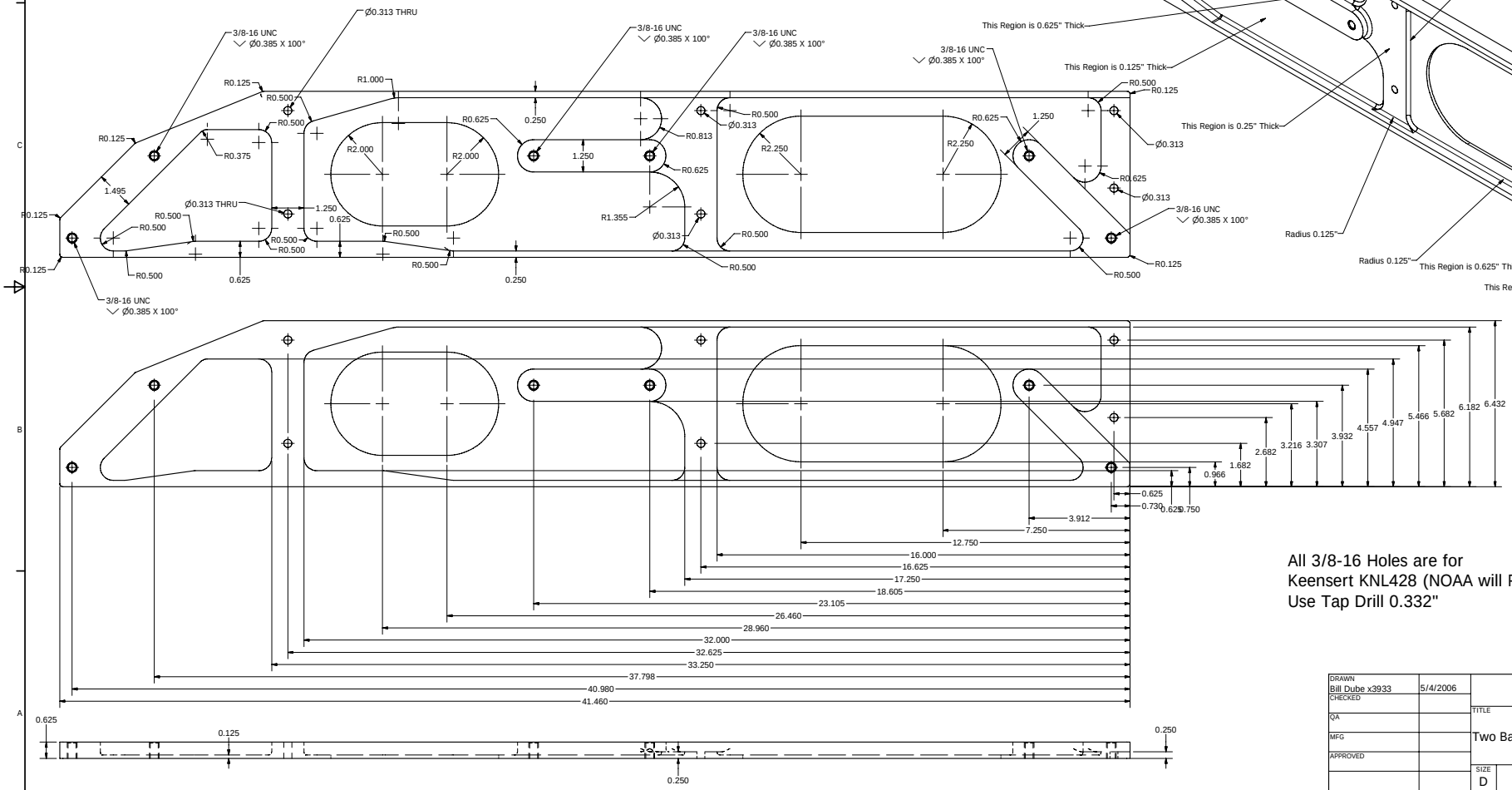

All 3/8-16 Holes are for
Keensert KNL428 (NOAA will Provide and Insert)
Use Tap Drill 0.332"

DRAWN Bill Dube x3933	5/4/2006	NOAA ESRL CRD-2
CHECKED		TITLE
QA		Two Bay Floor Plate, Narrow, Ver 2
MFG		
APPROVED		SIZE D / DWG NO FloorPlate2bKeensertPlus_05 / REV
		SCALE / SHEET 1 OF 1